OROCOBRE LIMITED
ABN 31 112 589 910

21 October 2015

ASX / TSX ANNOUNCEMENT

Olaroz Lithium Facility Operations Update

- **Production ramp up continues with production of approximately 256 tonnes of lithium carbonate in September, in line with forecast. Of this total there was approximately 50 tonnes of saleable lithium carbonate produced in the month that was recovered within the purification circuit.**

- **Modifications made to the purification circuit to attain the required temperature reduction to achieve efficient dissolution of the primary lithium carbonate in the absorption circuit have been successful. Further simple enhancements are required to gain the full benefit of these changes.**

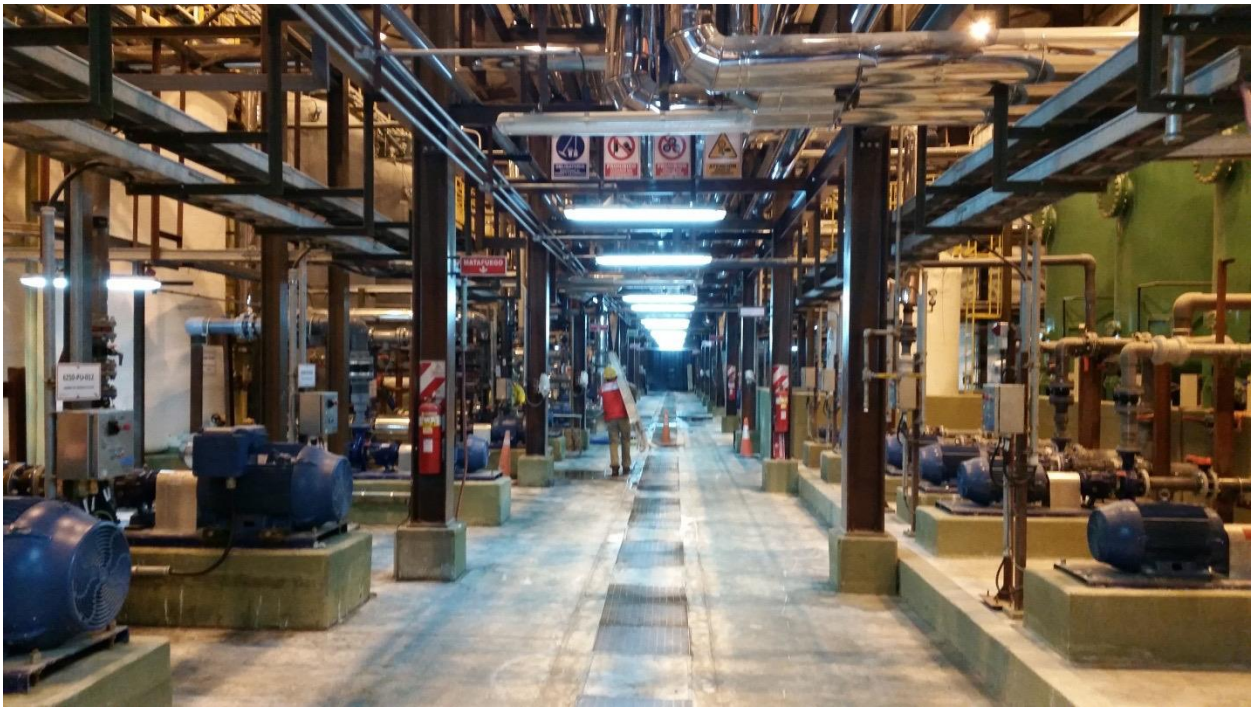

Orocobre Limited (ORE:ASX ORL:TSX) (**Orocobre** or the **Company**) wishes to advise on progress at the Olaroz Lithium Facility.

Production update

Production at the Olaroz Lithium Facility continued to increase in September with 256 tonnes of lithium carbonate produced. Of this total there was approximately 50 tonnes of saleable lithium carbonate recovered in the purification circuit under the changed operating conditions after the modifications to the cooling of the return solutions were made, as discussed below.

De-bottlenecking progress

Since the last update, progress continued on the de-bottlenecking program.

- **Heat Exchangers:**

  Elevated temperatures in the return solutions in the purification circuit had made the absorption part of the circuit approximately 10 degrees higher than target, thus limiting lithium carbonate dissolution (i.e. the level of lithium carbonate able to be held in solution). Successful modifications to the plant have now been completed resulting in reductions in temperature to 15ºC (better than the target range of 18-20ºC) being achieved through use of the cold incoming brine as cooling fluid.

  However, the use of cold brine in cooling has resulted in gradual blocking of the heat exchanger plates on the cold brine side causing a reduction of availability in the circuit by 30%. This blocking occurs from crystals pumped from the concentrated brine feed pond and crystal precipitation from the brine.

  The blocking of the heat exchanger plates results in inconsistent temperatures leading to the collection of solid lithium carbonate in the tanks after the absorption stage (the ~50 tonnes of product referred to earlier). To solve this issue there are two steps required:

  1. flocculants will be used to settle the suspended magnesium, sodium, boron and calcium salts in the pond to stop crystals being pumped from the concentrated brine feed pond to the lithium carbonate plant. This will allow a clarified brine to be fed to the lithium carbonate plant and reduce the incidence of crystal formation on the heat exchanger plates; and
  2. additional heat exchangers will be installed in parallel to those already installed. This will allow the shutdown and cleaning of one heat exchanger at a time without impacting on production.

  The use of flocculants in the concentrated brine feed pond to floc and settle the suspended salt crystals will produce a clarified brine and a lower loading of salt crystals in the brine being fed into the plant resulting in a slower rate of crystal formation and slower build up on the heat exchanger plates. The installation of two additional heat exchangers also allows cleaning to occur without impacting on the production rate and effectively provides some latent heat exchanger capacity.

  These enhancements will be completed by early December. The maximum production achievable until these modifications are completed will be ~22 tonnes of lithium carbonate per day with ~30 tonnes per day achievable after optimizing existing available heat through the circuit.

- **Magnesium and Calcium removal by Centrifuges:**

  The first of the two centrifuges continues to operate well with a capacity of 40m3/hr of brine feed into the plant. To reach the nameplate flow rate a second centrifuge, which is already on site, will be installed in November.

- **Outotec Polishing Filters**:

  The replacement of the Outotec polishing filters by centrifuges to remove calcium and magnesium allowed these filters to be used to provide additional filtering capacity to recover lithium carbonate solids remaining in the circuit prior to discharge from the plant. This modification was completed during September. The improvement in recovery was less than expected and highlighted that:

  a) solids losses directly from the primary reactors were minimal, which is positive

  b) lithium carbonate solids were accumulating from the plant drainage in a large concrete environmental tank prior to discharge from the plant. Subsequent investigations have indicated a potential additional 150 tonnes of saleable lithium carbonate in this tank that will now be recovered and sold. The system will also be changed to stop lithium carbonate reporting to this tank over coming weeks.

- **Boiler Increase:**

  The additional boiler will be installed by the end of November. However, lead times for importing some specialist piping and equipment that cannot be sourced locally and installation of same will delay the commissioning of the new boiler to early January. The increase in boiler capacity will permit the crystallizers and purification circuit to meet full capacity.

Production Guidance and Brine Inventory

The Olaroz Lithium Facility will reach breakeven point on an operating cost basis (net of taxes paid or reimbursed), when production reaches approximately 650 tonnes per month, subject to variability in final average sales price. The Company has previously advised that this would occur in October 2015 however, due to the engineering matters discussed above, this is now expected in December 2015.

All de-bottlenecking projects impacting production are now expected to be completed by early January 2016 permitting the plant to enter the final stage of ramp up and achievement of the nameplate production run rate. The timing of achievement of the nameplate production run rate is dependent upon the successful optimisation of operating practice once the debottlenecking rectifications are complete. Current brine inventory is up to approximately 40,000 tonnes of lithium carbonate equivalent (LCE) up from approximately 32,000 tonnes of LCE in June. There are no material changes to the capital cost estimates previously announced.

Debottlenecking timeline

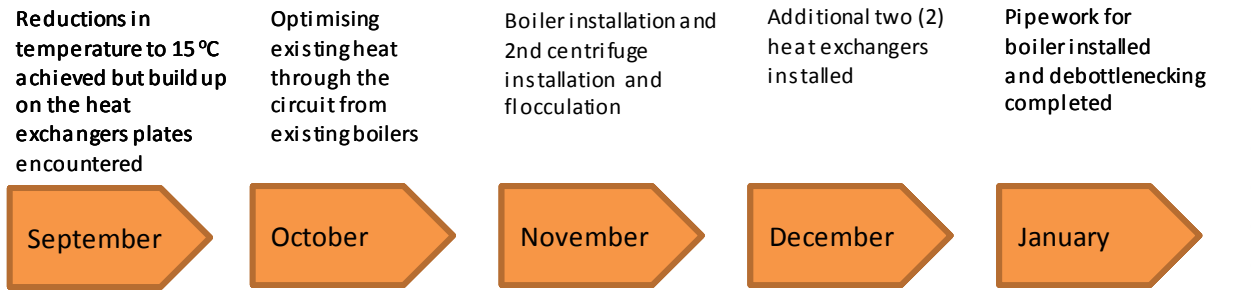

Financing

At the end of September the Company had approximately A$10m in free cash and US$37.5m in Standby Letters of Credit (SBLCs) to support the working capital requirements of the Olaroz Lithium Facility. Plans are advanced to enable better value to be extracted from these instruments and it is expected that Orocobre will be able to provide Sales de Jujuy S.A. (SDJ) with the necessary financial support through to positive operating cashflow without recourse to further funding. In March 2016 SDJ will make the next principal and interest payment of approximately US$13m. The Company and its joint venture partners are assessing various project level options, including working capital facilities and product prepayment arrangements with customers with the objective that any part of this payment that is not met by operating surpluses is otherwise covered.

Sales Orders

Commercial shipments of lithium carbonate have been and continue to be dispatched from the Olaroz Lithium Facility to Europe, Asia and the USA. All product that has been reported as produced is saleable product and has been sold or committed to a customer's purchase order. The inventory level held at any given time is minimal. There is a lag between production of product and the sale being recorded as each export order needs to be have a vessel booked, a document bundle produced (including bill of lading and commercial invoice) and be transported to the port. As previously advised samples have been provided to both industrial and battery sector customers.

Market Conditions

Prices in recent times have been steadily increasing to over US$6,000/tonne with further increases expected into CY2016 and beyond as lithium market conditions continue to tighten. Strong market demand and supply side constraints are resulting in continued upward pressure on market prices for lithium carbonate. FMC Corporation (NYSE:FMC) announced a 15% price increase in September for lithium products, effective 1st October 2015. The market for lithium carbonate is predominantly with downstream value-add producers of lithium compounds. Pricing for lithium carbonate is at a modest discount to the market price of dry lithium carbonate and there is strong ongoing and growing demand in this segment.

Managing Director Comments

Managing Director, Richard Seville, said, "We remain positive about our progress at the Olaroz Lithium Facility. The more we progress, the better we understand what remains to be done and the level of uncertainty reduces. We have continued to make rapid advances in removing bottlenecks, we improve our "know how" and operating practices on a daily basis and our revenues are rapidly increasing in line with increasing production and rising market prices."

Simplified Lithium Carbonate Plant Process Diagrams are below on page 6.

For more information please contact:

Australia and Asia

Richard Seville
Managing Director
T: +61 7 3871 3985
M:-+61 419 916 338
E: reseville@orocobre.com

David Hall
Business Development Manager
T: +61 7 3871 3985
M: +61 407 845 052
E: dhall@orocobre.com

North America

James Calaway
Chairman
M: +1 (713) 818 1457
E: jcalaway@orocobre.com

Simplified Lithium Carbonate Process Diagrams

PRIMARY CIRCUIT

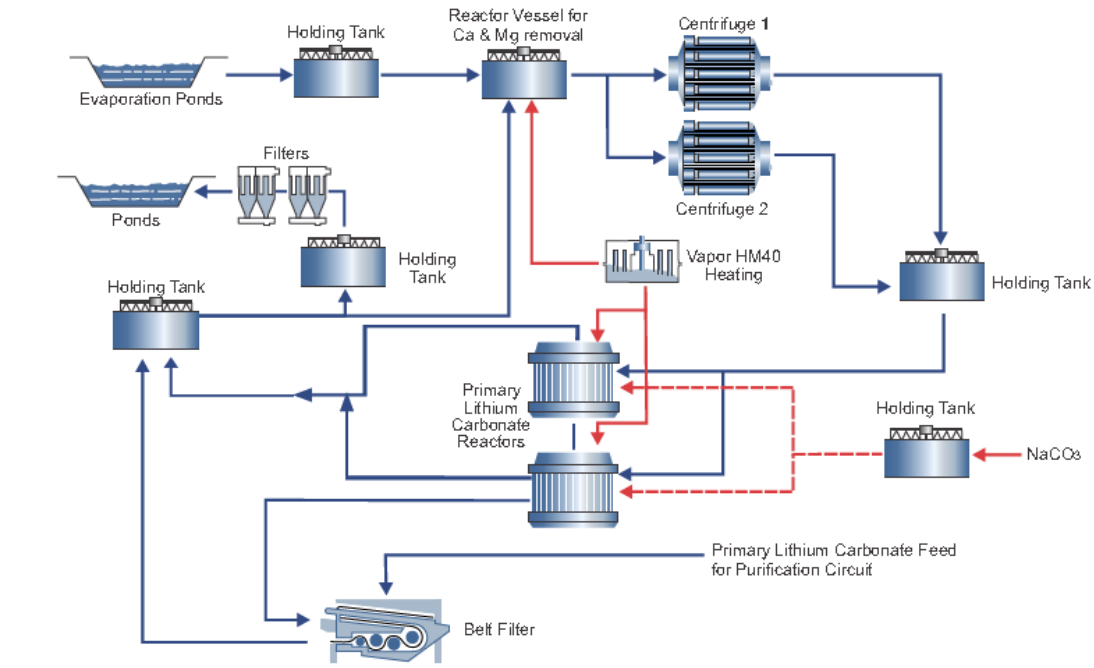

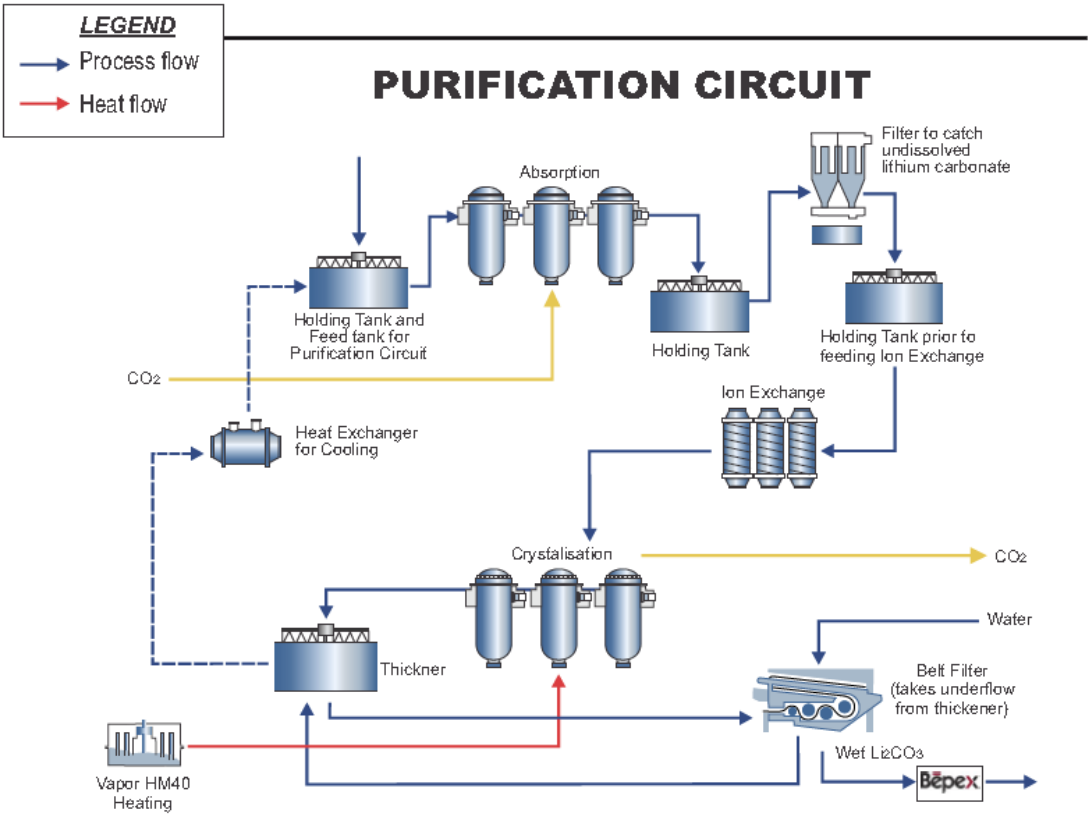

About Orocobre Limited

Orocobre Limited is listed on the Australian Securities Exchange and Toronto Stock Exchange (ASX:ORE) (TSX:ORL), and is building a substantial Argentinian-based industrial chemicals and minerals company through the construction and operation of its portfolio of lithium, potash and boron projects and facilities in the Puna region of northern Argentina. The Company has built, in partnership with Toyota Tsusho Corporation and JEMSE, the first large-scale, greenfield brine based lithium project in approximately 20 years at the Salar de Olaroz with planned production of 17,500 tonnes per annum of low-cost battery grade lithium carbonate.

The Olaroz Lithium Facility has a low environmental footprint because of the following aspects of the process:

- The process is designed to have a high processing recovery of lithium. With its low unit costs, the process will result in low cut-off grades, which will maximise resource recovery.
- The process route is designed with a zero liquid discharge design. All waste products are stored in permanent impoundments (the lined evaporation ponds). At the end of the project life the ponds will be capped and returned to a similar profile following soil placement and planting of original vegetation types.
- Brine is extracted from wells with minimum impact on freshwater resources outside the salar. Because the lithium is in sedimentary aquifers with relatively low permeability, drawdowns are limited to the salar itself. This is different from halite hosted deposits such as Salar de Atacama, Salar de Hombre Muerto and Salar de Rincon where the halite bodies have very high near surface permeability and the drawdown cones can impact on water resources around the Salar affecting the local environment.
- Energy used to concentrate the lithium in the brine is solar energy. The carbon footprint is lower than other processes.
- The technology developed has a very low maximum fresh water consumption of <20 l/s, which is low by industry standards.
- Sales de Jujuy S.A. is also committed to the ten principles of the sustainable development framework as developed by The International Council on Mining and Metals. The company has an active and well-funded “Shared Value” program aimed at the long term development of the local people.

The Company continues to follow the community and shared value policy to successfully work with suppliers and the employment bureau to focus on the hiring of local people from the communities of Olaroz, Huancar, Puesto Sey, Pastos Chicos, Catua, Susques, Jama, El Toro, Coranzulí, San Juan and Abrapampa. The project implementation is through EPCM (Engineering, Procurement and Construction Management) with a high proportion of local involvement through construction and supply contracts and local employment. The community and shared value policy continues to be a key success factor, training local people under the supervision of high quality experienced professionals.

The Company also wholly-owns Borax Argentina, an important regional borate producer.

For further information, please visit www.orocobre.com

Caution Regarding Forward-Looking Information

This news release contains "forward-looking information" within the meaning of applicable securities legislation. Forward-looking information contained in this release may include, but is not limited to, the commencement of commercial production and ramp up at the Olaroz Lithium Facility and the timing thereof, the cost of construction relative to the estimated capital cost of the Olaroz Lithium Facility, the design production rate for lithium carbonate at the Olaroz Lithium Facility, the expected brine grade at the Olaroz Project, the expected operating costs at the Olaroz Lithium Facility and the comparison of such expected costs to expected global operating costs, and the ongoing working relationship between Orocobre and the Province of Jujuy.

Such forward-looking information is subject to known and unknown risks, uncertainties and other factors that may cause actual results to be materially different from those expressed or implied by such forward-looking information, including but not limited to the risk of further changes in government regulations, policies or legislation; the possibility that required concessions may not be obtained, or may be obtained only on terms and conditions that are materially worse than anticipated; that further funding may be required, but unavailable, for the ongoing development of the Company's projects; fluctuations or decreases in commodity prices and market demand for product; uncertainty in the estimation, economic viability, recoverability and processing of mineral resources; risks associated with weather patterns and impact on production rate; risks associated with commissioning and ramp up of the Olaroz Lithium Facility to full capacity; unexpected capital or operating cost increases; uncertainty of meeting anticipated program milestones at the Olaroz Lithium Facility; general risks associated with the further development of the Olaroz Lithium Facility; as well as those factors disclosed in the Company's Annual Report for the year ended June 30, 2015 filed at www.sedar.com.

The Company believes that the assumptions and expectations reflected in such forward-looking information are reasonable. Assumptions have been made regarding, among other things: the timely receipt of required approvals and completion of agreements on reasonable terms and conditions; the ability of the Company to obtain financing as and when required and on reasonable terms and conditions; the prices of lithium and borates; market demand for product and the ability of the Company to operate in a safe, efficient and effective manner. Readers are cautioned that the foregoing list is not exhaustive of all factors and assumptions which may have been used. There can be no assurance that forward-looking information will prove to be accurate, as actual results and future events could differ materially from those anticipated in such information. Accordingly, readers should not place undue reliance on forward-looking information. The Company does not undertake to update any forward-looking information, except in accordance with applicable securities laws.